https://doi.org/10.33271/nvngu/2026-2/039

S. P. Minieiev[1],
orcid.org/0000-0002-4594-0915,
V. Ye. Antonchyk[*1],
orcid.org/0000-0002-4161-9112,
A. V. Pazynich[1],
orcid.org/0009-0003-6408-6800,
V. F. Hankevych[1],
orcid.org/0000-0002-8535-6318,
I. M. Matsiuk[2],
orcid.org/0000-0002-0861-0933

1 – M. S. Poliakov Institute of Geotechnical Mechanics of the National Academy of Sciences of Ukraine, Dnipro, Ukraine
2 – Dnipro University of Technology, Dnipro, Ukraine
* Corresponding author e-mail: volodimirantonchik1958@gmail.com

TECHNOLOGY AND TOOL FOR DRILLING LARGE-DIAMETER VENTILATION BOREHOLES

Purpose. To develop energy-efficient technology for drilling large-diameter ventilation boreholes from underground workings to the surface and create drilling tools that reduce energy consumption and wear during the destruction of hard rock.

Methodology. The development of a new technology for drilling ventilation boreholes and a drilling tool for drilling large diameter boreholes was carried out on the basis of the TRIZ (Theory of Inventive Problem Solving) and ARIZ (Algorithm for Inventive Problem Solving). The formation of theoretical solutions was carried out by means of physical and mathematical modelling of the stress state of rocks under the action of various types of drilling tools, and the results of calculations were processed in the Mathcad environment.

Findings. The drilling technology involves drilling an initial small-diameter ascending borehole from the working, which serves as a guide. Next, one or two large-diameter boreholes are drilled. Their bottom is formed as a truncated cone, which ensures the gravity movement of the destruction products to the leading borehole and their subsequent entry into the working. The technology includes the creation of two types of leading cuts: central and annular ones in the corner zone. This configuration of the bottom creates favourable conditions for further destruction of the rock. A network of cracks is created on the surface of the face with a percussion tool in the zone between the cuts, after which the fractured rock is effectively removed by the cutting elements of the tool. The created design of the drill bit contains cone bits for forming an annular cut and a bit crown for forming a central one. To destroy the rock in the intermediate zone, a pneumatic hammer with a chisel crown is used, which forms fractures, and a cutting crown to remove the weakened layer.

Originality. The technology is based on technical solutions that define effective drilling principles in difficult geological conditions and increase tool stability in hard rocks. The bit design combines an impact-cutting destruction mechanism and rational energy distribution during the drilling process.

Practical value. The proposed technology and drilling tool allow significantly reducing the duration of drilling operations and their cost. Increasing the penetration rate, reducing energy consumption and tool wear ensure economic efficiency. The technology allows one to quickly drill ventilation boreholes at the necessary points, improve ventilation of mine workings and reduce air transportation costs.

Keywords: *rocks, ventilation boreholes, drill bit, mine workings, drilling, drill rods*

Introduction. To date, there remains a problem with drilling ventilation boreholes and, in general, large-diameter boreholes, which consists of two issues. They involve: a drilling technology that ensures a one-hundred-percent connection between the first drilled borehole and the underground working located at a depth of up to 1,000 meters; a technology for drilling large-diameter boreholes in rock that would allow efficient destruction of large volumes of rock and their removal from the drilled borehole with significantly lower energy consumption and reduced wear of the drilling tool.

The development of technology for drilling ventilation boreholes and large-diameter boreholes in hard rock is based on the systematic application of technical solutions that combine the characteristics of the drilling process, the mechanism of rock destruction, and the design parameters of the drilling tool. The basis for the

---

formation of the technological scheme was the provisions of patent [1], which sets out the principles of rational organisation of the process of drilling ventilation shafts in complex geological conditions and defines approaches to ensuring the controllability of the borehole trajectory.

The design of the tool implies technical solutions presented in patent [2], which are aimed at increasing the stability and productivity of the drill bit under conditions of significant mechanical loads in hard and superhard rocks. The use of these design elements has made it possible to create a drilling tool that can operate with less wear and tear on the equipment and ensure stable operation at great depths.

Additionally, the design features of the percussive cutting tool described in patent [3] were taken into account. In particular, the principle of combining the percussive impact aimed at forming a network of cracks in the rock with the subsequent cutting destruction of the cracked massif was implemented. This combination promotes more efficient removal of material from the bottom hole and reduces the energy consumption of the drilling process due to the cutters working on a weakened rock structure. The combination of percussion and cutting elements in a single bit design ensures improved tool performance and the ability to efficiently drill large-diameter boreholes with minimal energy loss.

It is well known that an insufficient amount of air in coal mine workings results in an increase in methane concentration and a high probability of explosions; therefore, a significant amount of fresh air must be continuously supplied to mine workings. Fresh air is supplied to mine workings through ventilation shafts and ventilation boreholes. As the depth of mining horizons where coal is extracted increases, the problem of supplying air to mine workings also becomes more acute. In addition, during mining operations, gas-dynamic phenomena often occur, and explosions may take place, sometimes leading to mine fires [4]. The drilling of ventilation shafts itself requires substantial financial resources and time, which significantly increases the cost of extracted coal [5]. For this reason, air is currently supplied to mine workings through air ducts using high-power fans. Such fans are installed both on the surface and underground, and they sequentially pump air into the workings over considerable distances of up to 5–7 km. Since all these fans operate continuously, around the clock, they consume a huge amount of electricity – for example, over the course of a year – which significantly increases the cost of mined coal. This problem could be solved by ventilation boreholes that would supply fresh air to the end of the workings, eliminating the need for long and energy-intensive transportation of air from the shaft to the end of the workings.

Literature review. It is well known that drilling large-diameter boreholes is a significant challenge, as, at the current level of drilling technology, a substantial amount of rock must be broken down to small particles, sand, and dust, and then removed from the borehole. This requires substantial electrical energy consumption for drilling and removal of the broken rock, a large number of drill bits or cutters due to their wear, and considerable time for drilling the borehole because of the low drilling speed. All these factors increase the cost of drilling large-diameter ventilation boreholes and prolong the process, so an effective solution to this problem would significantly reduce both the cost of drilling operations and the time required to complete them, thereby substantially improving labour productivity in the mining industry.

The roller-cone method for drilling boreholes is also the most widely used in mining operations, which accounts for up to 82.5 % of all drilling volumes. When boreholes are drilled using this method, a reactive force acts on the drill rod and the drilling rig from the bottom of the hole, opposing the force applied by the drilling rig to the drilling tool for rock destruction. This results in oscillations and vibrations of the components and assemblies of the drilling rig, premature wear of the roller-cone bit elements and their bearing supports, and, when drilling with diamond bits, to chipping of diamond grains. During borehole drilling, longitudinal, transverse, and rotational vibrations occur. To reduce the negative impact of these vibrations and oscillations on the drilling rig and drill bit, various types of downhole dampers are used.

All dampers have complex designs and only partially perform their intended functions. The use of patented developments ensures an increase in borehole drilling speed, prevention of failures of drill rods and feed mechanism components of drilling rigs.

Vibration damping is achieved by using gas or liquid in a high-pressure chamber, where pressure and force required to feed the drilling assembly are generated, while also facilitating the removal of rock cuttings from the borehole. The authors focused on searching for methods to increase the productivity of borehole drilling in hard rock and ways to improve the efficiency of drilling boreholes in hard rock.

Modern research in the field of large-diameter drilling covers a wide range of issues, from directional drilling technologies to energy efficiency and the enhancement of shaft stability. Zhang, et al. [6] consider the application of high-precision large-diameter borehole formation technology in coal mines, which allows for increased accuracy and productivity of operations. Mysliuk and colleagues [7] systematize borehole completion methods, creating a fundamental basis for modern drilling technologies. The review by Amadike, et al. [8] summarizes drilling methods in engineering and geology, while Eremin, et al. [9] propose numerical modelling of the effect of borehole diameter on reducing the risk of rock bursts.

Liu and Xu [10], in an encyclopaedic publication, classify drilling types and their characteristics, which is useful for selecting the optimal technology. Wang, et al. [11] apply finite element methods to analyse the stability of large ventilation shafts, while Pinchiaroglio and colleagues [12] investigate drilling parameters when constructing large-diameter boreholes under complex geological conditions. Mustafaev and Djuraev [13] propose ways to improve the efficiency of tools under difficult conditions, whereas Zhukova, et al. [14] and Nazarov and colleagues [15] analyse energy consumption and methods for its reduction. Finally, Minieiev, et al. [16] consider approaches to increasing drilling productivity in hard rock formations.

In summary, these studies provide a comprehensive scientific and technical foundation for the development of new technologies for drilling large-diameter ventilation borehole that combine accuracy, energy efficiency, and safety.

In their work, Rossi, et al. [17], investigate a combined thermomechanical drilling technology, which integrates thermal treatment of the rock with mechanical destruction. The authors demonstrate that preheating the rock significantly reduces its strength, allowing for a decrease in the load on the drill bit and an increase in drilling speed. This is particularly relevant for deep geothermal and mine boreholes, where traditional methods are energy-intensive.

Patent CN112302700B [18] proposes a method for constructing ventilation shafts in metro tunnel sections, based on the optimisation of shaft design and rock removal technology. The solution is aimed at improving shaft safety and stability and can be adapted to mining conditions for large-diameter drilling.

Liu and colleagues [19] have developed a large-diameter drilling technology using a gravity-based slurry removal system. The authors analyse the design features of the equipment and methods for process optimisation, which allows for reduced energy consumption and increased drilling productivity under complex geological conditions.

Savage, et al. [20] focus on the development of new drill bit designs for use in hard rock formations. The application of full-scale testing in basalt formations confirms the effectiveness of these innovative solutions, which reduce tool wear and increase drilling speed. This study highlights the importance of testing under real conditions to enhance tool reliability.

Ye and colleagues [21] propose innovative solutions for drill bits with clustered edge buttons for drilling large-diameter geothermal borehole. The results demonstrate a significant increase in tool durability and the efficiency of high-strength rock destruction, making the technology promising for mine construction.

Fang, et al. [22] performed numerical modelling of shaft stability when using raise drilling technology in karst formations. The authors demonstrated that applying raise drilling while accounting for geological features allows for minimizing collapse risks and ensures the safe drilling of large-diameter shafts. This study emphasises the importance of geomechanical analysis in the design of ventilation shafts.

Information available on the issue of drilling large-diameter ventilation boreholes, especially in hard and very hard rock, is limited.

There are known methods for drilling large-diameter boreholes, including ventilation boreholes, which are carried out as follows: from the surface, a pilot borehole is drilled (or, in most cases, a borehole of a relatively small diameter is drilled directly) until it reaches the working area. After that, from the surface or from the working, the pilot borehole is expanded to the specified diameter and cased with pipes. A drawback of existing methods for drilling ventilation boreholes is their high cost. This is because such boreholes must be located at a distance of 5–7 km from the mine shaft, which serves as a reference point for drilling the ventilation borehole. For example, for a distance of 5,000 m, an error of 0.020 will result in the ventilation borehole failing to intersect the underground working. Apart from that, it is not known with sufficient accuracy how much the underground working into which a ventilation borehole is to be drilled and which is located deviates from the theoretical layout of the mine workings, for example, at a depth of 1,000 m and at a distance of 5,000 m from the shaft. Finally, drilling to a depth of 1,000 m may also result in deviations from the theoretical vertical, which, combined with the aforementioned possible errors, makes the probability of hitting the ventilation borehole in the workings in the case of surface drilling very low. Such a low probability means that in order to ensure that a ventilation borehole intersects the underground workings, several such boreholes must be drilled so that at least one of them hits the workings, which requires significant funds.

Considering the above, the authors of the article propose a new method for drilling ventilation boreholes, which will make it possible to reliably connect a mine working with the surface at any depth and distance from the mine shaft using a single ventilation borehole.

Purpose. The purpose of the work is to consider the problems of drilling large-diameter ventilation boreholes at a considerable distance from the shaft and at depths of up to 1,000 m. It is to show the drawbacks of existing technologies for drilling such boreholes and ways to eliminate them. To achieve this goal, it is necessary to develop a new technology for drilling large-diameter ventilation boreholes from dead ends of workings to the surface from depths of up to 1,000 m and describe its implementation as well as to develop drilling tools for the new technology for drilling large-diameter ventilation boreholes.

The new technical solution is based on the task of improving methods for drilling ventilation boreholes by drilling a pilot upward borehole in the direction of the surface from the required location in the mine to the exit of the drill bit to the surface. This makes it possible to reliably connect any required section of the mine workings to the surface with a ventilation borehole on the first attempt and with a single well, after which the drill rods are left in the pilot borehole and used as guide elements at the stage of drilling sedimentary rocks.

Methods. The development of an innovative technology for drilling large-diameter ventilation boreholes was based on the synthesis of theoretical knowledge and practical inventions. The research methodology included an analysis of rock destruction processes taking into account the configuration of the borehole bottom, as well as a study on the latest engineering solutions in the field of drilling. This made it possible to develop a technology that combines an improved drill head geometry with innovative cutting elements. This ensured not only a significant increase in efficiency but also reduced equipment wear, which is critically important for long-term operation.

Results. The new technology for drilling large-diameter ventilation boreholes is based on a combined approach which includes the use of an improved bottom-hole configuration and innovative drilling tools. The main objective of the development is to improve the efficiency and safety of operations. This is achieved through optimisation of the rock destruction process, which makes it possible to significantly reduce energy consumption and increase the rate of penetration.

The new technology for drilling large-diameter ventilation boreholes is shown in Figs. 1–3.

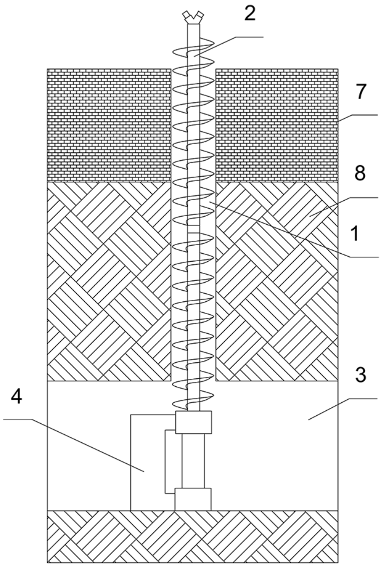

Fig. 1. Diagram of drilling a pilot ventilation borehole from the underground working to the surface

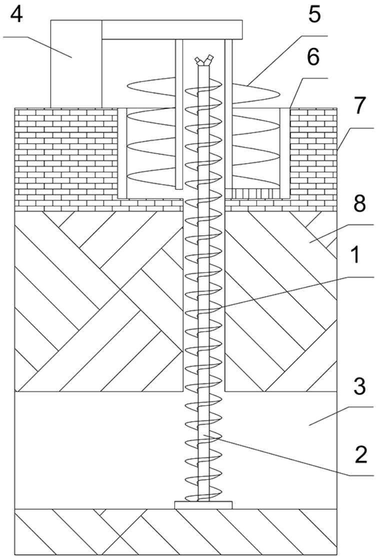

Fig. 2. Diagram of drilling a ventilation borehole of a specified diameter from the surface through a sedimentary rock layer

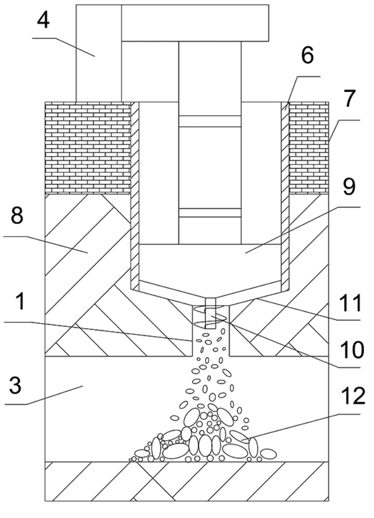

Fig. 3. Diagram of drilling a ventilation borehole of a specified diameter from the surface through a rock layer

The figures show the following symbols: *1* – pilot borehole; *2* – drill rod assembly; *3* – mine workings; *4* – drilling rig; *5* – large-diameter auger rod; *6* – casing pipe; *7* – sedimentary rocks; *8* – rock formations; *9* – drill bit; *10* – auger guide; *11* conical bottom surface in rock formations; *12* – rock destruction products.

The technology for drilling ventilation boreholes is carried out using the following method.

From mine workings *3*, at the location where fresh air is required, a drilling rig *4* drills an upward pilot borehole *1* of a small diameter to the surface of the drill rod assembly *2* (Fig. 1). After that, the drill rod assembly *2* is fixed in mine workings *3*, and from the surface, large-diameter auger rods *5* are used to drill a borehole of a specified diameter in sedimentary rocks *7* guided by the drill rod assembly *2*, until reaching rock formations 8, and then it is cased with casing pipes *6* (Fig. 2). Subsequently, the drill rod assembly *2* is disassembled and removed from the pilot borehole *1*, after which its enlargement in the rock layer is continued. Drilling in rock formation *8* is performed using a drill bit *9*, which has an auger guide *10* located in the upward pilot borehole, which sets the direction of drilling, and a cutting crown in the form of a truncated cone, which creates a conical surface at the bottom of the rock *11* of the ventilation borehole in the form of a truncated cone with the top pointing downwards. This ensures the transportation of rock destruction products *12* to the pilot borehole *1*, from which they descend into the mine working *3* and are either transported to the surface or backfilled into the excavated space. The auger guide *10* of the drill bit *9* directs the rock destruction products *12* into the pilot borehole *1*, guides the drill bit *9* along the central axis of the pilot borehole 1, and enables the creation of a ventilation borehole of the specified direction and diameter (Fig. 3).

It is known that drilling boreholes in hard rock is usually carried out using cone bits, which operate on a rotary-percussive principle. The essence of the method is to create overlapping holes (depressions) on the rock surface, which destroys and removes the rock layer to the depth of these depressions, ensuring the drilling process.

The main drawback of roller-cone bits is the need to apply significant impact forces to form depressions in hard and, especially, very hard rocks. This requires high energy consumption and sufficient tool strength. Moreover, the energy expended by the bit's teeth to create the depressions is used inefficiently, since a significant part of it is used to grind the rock beneath the tooth at the moment of its penetration to form the depression. In addition to the high energy required to penetrate the rock, this process causes rapid abrasive wear of the teeth due to the high hardness of the rock, as well as wear and damage to the roller-cone bit's structural elements, particularly the bearings, due to the high loads.

In some cases, drilling of boreholes in hard rock formations is carried out using thermomechanical roller-cone drill bits, which implement a thermomechanical drilling method. This method involves heating the rock to a specified temperature in order to create a stressed state in it as a result of thermal expansion. This makes it possible to shatter the rock with lower forces acting on the teeth of the roller-cone bits and to increase the drilling rate, since the combined stresses in the rock caused by thermal expansion and tooth pressure exceed the rock strength limit. The thermomechanical drilling method allows increasing the penetration rate of boreholes in hard rock formations when using roller-cone bits by a factor of 1.8–2.5. However, these bits have significant drawbacks. Only 20–25 % of the heat used to heat the rock is actually transferred to the rock mass, which, given the high cost of energy resources, results in a substantial increase in the cost of work. The most critical disadvantage is the intensive wear of the mechanical tool operating in a high-temperature zone. This adversely affects the properties of the carbide teeth of the bit cutting structure and the performance of the bearings, leading to rapid tool failure, frequent replacements, and, as a result, to an increase in costs that exceed those of conventional mechanical drilling.

An alternative is the cryogenic drilling method, which involves rapid cooling of the rock face using fluids with a low boiling temperature (for example, liquid nitrogen). This causes a reduction in the volume of the cooled rock and the development of tensile stresses. Subsequent pressure from the tool teeth increases the total stresses, which exceed the rock strength limit, thereby ensuring its destruction with lower forces and reduced energy consumption. However, the cryogenic method has its limitations: operation of the tool in a low-temperature zone reduces the strength of hard alloys, leading to rapid wear or failure. In addition, the significant costs associated with the production of liquid nitrogen make the technology economically unviable.

At present, the most common types of the mechanical rock drilling method are rotary-cutting and rotary-percussive drilling. Rotary-cutting drilling is effective only for rocks of low and medium strength. As rock strength increases, rapid wear of the cutting structure of drill bits occurs, which leads to significant energy consumption when drilling with worn teeth and also requires increased costs for replacing drill bits.

Rotary-percussive drilling of hard rocks, carried out using crown bits with pneumatic hammers or roller-cone bits, is no less energy-intensive as well. This is because the hard rock layer is removed by creating and overlapping multiple depressions (craters) formed by impacts of the teeth. When a hole is created by an impact perpendicular to the rock surface, the rock is crushed to the level of sand and dust due to the high impact energy required (otherwise it is impossible to create a hole). This, in turn, leads to rapid wear of the drill bit teeth and to significant energy consumption and costs associated with the manufacture or repair of drilling tools.

Thus, the existing methods and tools for rock drilling are imperfect, which makes the drilling of boreholes, especially large-diameter ones, a significant challenge and requires substantial costs. In view of this, the authors have developed a new method for drilling rocks of arbitrary strength, a new technology for drilling large-diameter boreholes, and a new drill bit design, which is shown in Figs. 4–6.

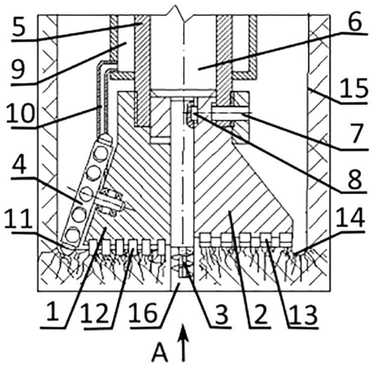

Fig. 4. Overall view of a drill bit in longitudinal cross-section

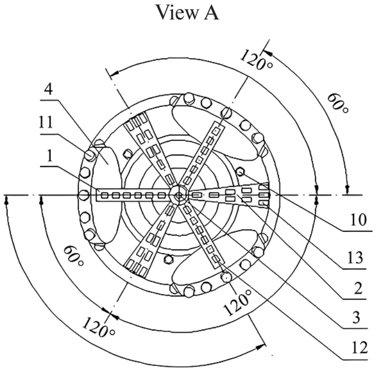

Fig. 5. View A of the drill bit from the rock face side

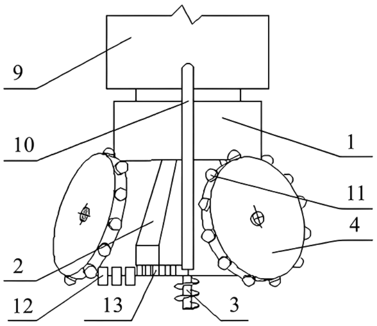

Fig. 6. View of the drill bit from the side in the direction between the trunnion and the hammer anvil support

The drill bit for large-diameter boreholes consists of three trunnions *1* rigidly connected to each other by a ring in the form of a single cast part, three hammer anvil supports *2* rigidly connected to each other by a ring in the form of a single cast part, a screw *3*, roller-cone wheels *4*, a pneumatic hammer body *5*, the pneumatic hammer striker *6*, a key *7*, an internal key *8*, an air duct *9*, and three pipes *10*. The roller-cone wheels are equipped with cone teeth *11*, the trunnions *1* are equipped with cutting teeth *12*, and the hammer anvil supports *2* are equipped with chisel teeth *13*. Figs. 1–3 also show the rock face *11* and the pilot borehole *11*.

The drill bit is assembled and operates as follows.

A tripod of three trunnions *1*, rigidly connected to each other by a ring in the form of a single cast part and equipped with roller-cone wheels *4*, is screwed onto the body of the pneumatic hammer *5*. After that, a screw *3* is inserted separately, in the tripod of three hammer anvil supports *2*, rigidly connected to each other by a ring in the form of a single cast part, and secured with the internal key *8*. The tripod consisting of three hammer anvil supports *2* is then inserted from below, into the gaps between the roller-cone wheels, into the body of the pneumatic hammer *5* and fixed with the key *7* (Figs. 1–3).

After that, the drill bit is positioned on the rock face, cantered along the axis of the pilot borehole using the screw *3*, and the supply of compressed air and rotational torque is activated. It is assumed that the pilot borehole has been drilled either between mine levels or from the mine working to the surface. The compressed air is supplied through the air duct *9* and via the three pipes *10* onto the rock face *14* to remove the rock crushing products. The first to contact the rock face are the teeth of the roller-cone wheels, which begin to drill a pilot cut in the corner zone of the rock face *14*. After the roller-cone teeth have penetrated to the required depth and a pilot ring cut has been formed in the corner zone, the chisel teeth *13* of the three hammer anvil supports *2* are pressed against the rock face *14*. Then the pneumatic hammer begins operation, with the striker *6* impacting the end surfaces of the hammer anvil supports *2*, while the chisel teeth *13* of the three hammer anvil supports *2* strike the rock face. The impact energy of the striker *6*, transmitted through the hammer anvil supports *2* and the chisel teeth *13* to the rock face, creates a network of radial cracks on it, extending from the pilot borehole to the corner ring recess (cut). In this process, the chisel teeth *13* do not penetrate the rock to a significant extent (as is required in conventional rotary-percussive drilling); they only form a network of radial cracks on the rock face, which protrudes between the corner ring recess and the pilot borehole.

Thus, before the cutting teeth *12* begin to operate, the rock face has a ring-shaped recess in the corner zone and a cylindrical hole in the form of the pilot borehole in the centre of the large-diameter ventilation borehole. Subsequently, the cutting teeth *12* are pressed against the rock face. The main rock mass is broken by the cutting teeth *12*, which penetrate and chip away the already fractured rock volume between the corner ring recess and the pilot borehole. The radial cracks within the rock volume are perpendicular to the direction of the forces applied by the cutting teeth *12*, so the rock breaks along the free surfaces of the cracks due to tangential stresses, which are 5–10 times lower than the normal stresses for different rock types. As is known, in existing drill bits, destruction of rock by cutting occurs primarily under the action of normal stresses.

As is known, the least amount of energy is expended when breaking hard rock under the action of tangential stresses. Therefore, the most efficient method is drilling by cutting fractured rock, which requires lower forces both to penetrate the cutting tools into the fractured rock and for the cutting process itself. In this case, the fractured rock is destroyed by overcoming the maximum permissible tangential or tensile stresses, which are 5–10 times lower than the normal stresses for different rock types. The formation of cracks in rock requires the least amount of energy when there is a free surface in the stress zone of the rock under the action of the tool. On this free surface, microscopic displacement of rock fragments occurs resulting in the formation of cracks that propagate predominantly toward the free surface. Even more cracks are formed in the rock when in the stress zones created by the drilling tool there are two free surfaces on opposite sides of the stress zone. In this case, the rock can deform in opposite directions, creating tensile stresses, whose magnitude required to break the rock is significantly lower compared to the compressive stresses, which break most of the rock mass in conventional drill bits. The first free surface, as is known in the existing rock drilling methods, is created by the pilot borehole along the central axis of the borehole. The second free surface at the contour of the rock face, proposed by the authors, is a ring-shaped recess in the corner zone of the rock face, formed by drilling several specially designed corner roller-cone wheels.

The presence of a ring-shaped pilot recess and a central cylindrical recess creates free surfaces on opposite sides (along the radius of the rock face) and, under the action of the bit teeth impacts, ensures the propagation of through-cracks in the radial direction from the centre of the rock face to the borehole walls. This makes most of the rock face surface fractured, requiring the least amount of energy during drilling.

Considering that rock destruction in the corner zone of the borehole bottom is the most energy-intensive and is accompanied by significant tool wear, this zone is simultaneously drilled by three roller-cone cutters, which prevents their premature wear compared to other rock-cutting tools of the bit. Taking into account the fact that in the centre of the borehole the linear velocity of the cutters or the teeth of the roller cones approaches zero and drilling, as such, does not occur, which leads to destruction of the drilling tool, it is advisable to form a cylindrical recess in the centre of the borehole bottom using a percussive-rotary tool, for example, a pneumatic hammer with a single-blade bit. Drilling in this case occurs due to the creation and overlap of indentations produced by blade impacts on the rock, while rotation ensures the overlap of impact indentations and the removal of a rock layer. This method of rock drilling does not depend on the position of the tool on the borehole bottom surface, since rotation of the bit does not cause rock breakage. Although this process is energy-intensive, it is significantly more cost-effective than the abrasive wear of cutters and roller-cone teeth and their destruction during the drilling of the borehole centre. Moreover, the pilot axial borehole may have a small diameter, for example, 42 mm.

A network of cracks covering most of the borehole bottom surface between the pilot borehole and the annular undercut is formed by impacts of a chisel-type bit actuated by a pneumatic hammer. The power of these impacts is sufficient to create cracks of the required depth, but it is significantly lower than the impact energy required for rotary-percussive drilling, which substantially reduces both wear of the bit teeth and energy consumption. After the chisel-type bit, which delivers the impacts and forms the crack network, cutters are arranged which, while rotating about the central axis of the borehole, chip away the already fractured borehole bottom surface.

Thus, the simultaneous presence in the drill bit of three roller-cone cutters for drilling the corner zone of the borehole bottom and forming an annular recess (cut) therein, together with a cylindrical opening in the central zone of the borehole bottom in the form of a pilot borehole, makes it possible during the drilling to create the most advantageous configuration of the borehole bottom surface (in terms of rock destruction), in which cracks are formed by impact teeth, while a layer of rock is removed by cutting teeth.

Let us consider the physics of the rock destruction process into two opposite free surfaces and a third fracture surface perpendicular to them, using as an example a mathematical model of a borehole bottom with annular and axial undercuts. Figs. 7–10 schematically show a section of the borehole bottom surface formed by the proposed drill bit, which has two pilot undercuts in the corner zone and in the centre along the borehole axis. Figs. 7 and 8 show, respectively, a three-dimensional view of a section of the borehole bottom surface of the impact-cutting bit and view "A" of the same section of the borehole bottom surface of the impact-cutting bit.

In Figs. 7–8, the following designations are used: *1* – rock ledge at the borehole bottom; *2* – tooth; *3* – crack; F – force exerted by the tooth on the rock; S_d – area of rock deformed by the tooth; S_c – area of the crack surface; Δr – deformation radius; b – width of the ring notch; r_τ – radius of stresses in the volume of the compressed rock; a – distance from the tooth to the edge of the ledge; h – height of the ledge; R_u – radius of the undercut; R_a – radius of the axial borehole.

The process of loading the rock by the bit tooth occurs relatively rapidly, but much more slowly than the transmission of molecular interactions (i.e., the speed of sound) in the rock. From the moment the tooth comes into contact with the rock, it gradually penetrates into it, causing deformation. The deformation process is transmitted through the rock at the speed of sound as molecular interactions, leading to a certain displacement of molecules and the development of stresses within the rock mass. The integrity of the rock mass is preserved until the stresses in the rock exceed the allowable limit, after which rock failure occurs along surfaces of the maximum permissible stresses.

A peculiarity of rock destruction on a free surface is that the free surface limits the number of molecules involved in the interaction during deformation of the rock mass caused by penetration of the bit tooth. As a result, as the tooth penetrates further and deformation and stresses in the rock mass increase, stresses in the direction of the free surface, where fewer molecules are involved, grow, reach, and exceed their limiting values much earlier than in the rock volume in other directions. This leads to the formation of cracks, rock destruction, and chipping of the rock toward the free surface.

Let us determine the work required to form a crack *2* in the annular ledge of the borehole bottom created by the impact-cutting bit, using the mathematical model shown in Figs. 7 and 8 as an example.

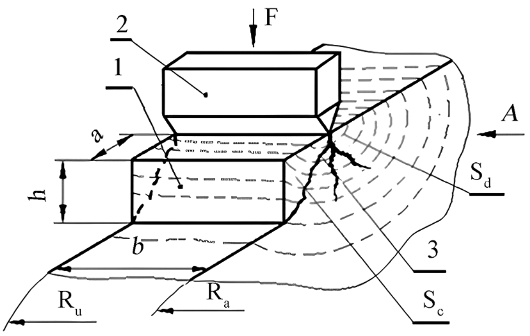

Fig. 7. Three-dimensional presentation of a section of the borehole bottom surface of the impact-cutting bit

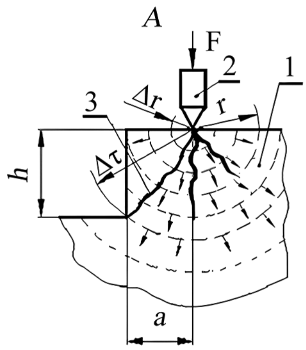

Fig. 8. View "A" of a section of the borehole bottom surface of the impact-cutting bit

Within the range of small strains, Hooke's law applies to most materials in the form $\sigma = E \cdot \varepsilon$, which establishes a direct proportionality between stresses and strains. This formula accounts for the dimensions and volume of the body being deformed under the action of a force and is obtained from Hooke's law by dividing both parts of the equation by the surface area of the body on which the force acts.

$$\frac{F}{S} = \frac{k \cdot x}{S} = \sigma = \frac{k \cdot x}{b \cdot l} = E \cdot \frac{\Delta l}{l} = E\varepsilon.$$

The energy expended on compressing the rock by the bit tooth is equal to the work of compression of the rock volume by the tooth and is expressed by the formula

$$A = \int_0^V p(V)\,dV, \tag{1}$$

where A is the energy expended on compressing the rock by the bit tooth until it breaks; $p(V)$ is the pressure exerted by the tooth on the rock; V is the volume of rock being compressed,

$$p(V) = \frac{F}{S_d(\Delta r)}, \tag{2}$$

F is the force exerted by the tooth on the rock, $S_d(\Delta r)$ is the area of rock deformed by the tooth,

$$S_d(\Delta r) = \frac{1}{2} \cdot 2\pi\Delta r \cdot b; \tag{3}$$

$$V = \frac{1}{2}\pi\Delta r^2 \cdot b. \tag{4}$$

Substituting equations (2–4) into equation (1), we obtain

$$A = \int_0^{\Delta r} \frac{F}{\pi\Delta r \cdot b}\, d\left(\frac{1}{2}\pi\Delta r^2 \cdot b\right) = F \cdot \Delta r. \tag{5}$$

Let us determine the deformation radius to destroy the given rock using the formula

$$\left[\sigma_p\right] = E\varepsilon = E\frac{\Delta r}{r_m},$$

where E is the modulus of elasticity of the given rock, r_m is the radius of the compressed rock volume, $[\sigma_p]$ is the maximum permissible tensile stress for the given rock,

$$\Delta r = \frac{\left[\sigma_\partial\right] \cdot r_m}{E}. \tag{6}$$

The force F is determined from the condition of rock destruction to a depth h: where S_c is the area of the crack surface,

$$F = [\sigma_p] \cdot S_c; \tag{7}$$

$$r_m = \sqrt{a^2 + h^2}; \tag{8}$$

$$S_c = \sqrt{a^2 + h^2} \cdot b, \tag{9}$$

a is distance from the tooth to the edge of the ledge, h is the height of the ledge.

Substituting (9) into (7, 8 and 6) and further into (5), we obtain

$$A = \left[\sigma_p\right] \cdot \sqrt{a^2 + h^2} \cdot b \cdot \frac{\left[\sigma_p\right] \cdot \sqrt{a^2 + h^2}}{E} = \frac{\left[\sigma_p\right]^2 \cdot \left(a^2 + h^2\right) \cdot b}{E}.$$

Considering the fact that

$$b = R_u - R_a,$$

where R_u is the radius of the undercut; R_a is the radius of the axial borehole.

Thus, we obtain

$$A = \frac{\left[\sigma_p\right]^2 \cdot \left(a^2 + h^2\right) \cdot \left(R_u - R_a\right)}{E}. \tag{10}$$

Equation (10) defines the energy of the tooth impact on the rock ledge between the axial borehole and the undercut in the annular corner zone of the borehole bottom.

Let us determine the work required to shear the rock ledge from the cutter to the crack after the tooth impact (Figs. 9 and 10). The rotary movement of the cutter transmits forces from the cutter blade to the rock ledge (Figs. 9 and 10), and by deforming the rock, generates stresses within its volume.

In Figs. 9–10, the following designations are used: *1* – rock ledge at the borehole bottom; *2* – cutter; *3* – crack; F – force exerted by the cutter on the rock; S_s – area of the rock sector being sheared by the cutter; Δl – deformation radius; b – width of the annular undercut; l – radius of stresses in the volume of compressed rock; h – height of the ledge; R_u – radius of the undercut; R_a – radius of the axial borehole; l_s – radius of shear stress; α – angle of the rock sector being sheared.

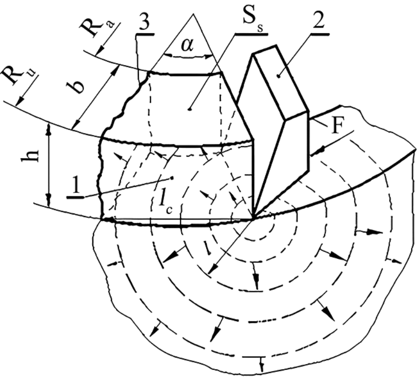

Fig. 9. Three-dimensional view of a portion of the borehole bottom surface of the impact-cutting bit

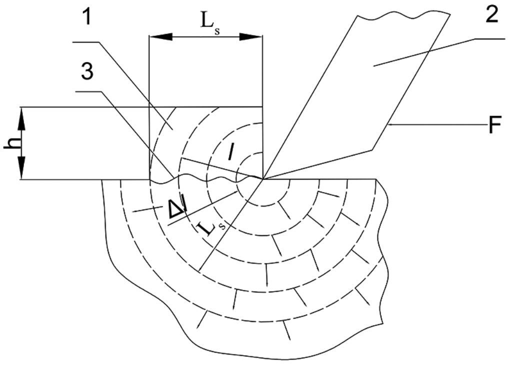

Fig. 10. Side view of a section of the borehole bottom surface of the impact-cutting bit

The circumferential pressure of the cutter transmits force from the cutter blade to the rock ledge and, by deforming the rock, generates stresses within the rock volume (Figs. 9, 10).

The energy of destruction (shearing) of the rock ledge is equal to the work performed by the cutter during rock shearing and is expressed by the formula (1), where $p(V)$ is the pressure exerted by the cutter on the rock; V is the volume of rock being compressed; F is the force exerted by the cutter on the rock; $S(\Delta l)$ is the area of the rock sector being sheared by the cutter; Δl is the deformation radius,

$$p(V) = \frac{F}{S_D(\Delta l)}; \tag{11}$$

$$S_D(\Delta l) = \tfrac{3}{4} \cdot 2\pi \cdot l \cdot \left(R_u - R_a\right); \tag{12}$$

$$V = \tfrac{3}{4}\pi \Delta l^2 \cdot \left(R_u - R_a\right), \tag{13}$$

where R_u is the radius of the undercut; R_a is the radius of the axial borehole.

Substituting (12) into (11) and further (11) and (13) into (1), we obtain

$$A = \int_0^{\Delta l} \frac{F}{\tfrac{3}{4} 2\pi \Delta l \cdot \left(R_u - R_a\right)} d\left(\tfrac{3}{4}\pi \Delta l^2 \cdot \left(R_u - -R_a\right)\right) = F \cdot \Delta l. \tag{14}$$

The force F is found from the condition of rock failure in shear, where

$$F = [\tau_s] \cdot S_s, \tag{15}$$

where $[\tau_s]$ is the limit of permissible rock shear stress; S_s is the area of the rock sector being sheared by the cutter,

$$S_s = \left(R_u^2 - R_a^2\right)\frac{\alpha}{2}, \tag{16}$$

where α is the angle of the rock sector being sheared, rad.

The deformation radius Δl is determined by the formula

$$\left[\tau_s\right] = E\varepsilon = E\frac{\Delta l}{l}.$$

From which

$$\Delta l = \frac{\left[\tau_s\right] \cdot l}{E}, \tag{17}$$

where l is the chord length at the radius R_u.

Given the small step of fracture of the sectoral ledges, the chord length is assumed to be equal to the arc length

$$l = R_u \cdot \alpha. \tag{18}$$

Substituting (18) into (17) and (16) into (15) and further (17) and (15) into (14), we obtain

$$A = \left[\tau_s\right] \cdot \tfrac{1}{2}\left(R_u{}^2 - R_a{}^2\right) \cdot \alpha \cdot \frac{\left[\tau_s\right] R_u \alpha}{E}.$$

The resulting formula determines the work required to shear a single rock ledge along the arc length l_c from the cutter blade to the crack

$$A_s = \frac{0.5\left[\tau_s\right]^2 \alpha^2 \cdot \left(R_u{}^2 - R_a{}^2\right) \cdot R_u}{E}. \tag{19}$$

Let us determine the amount of energy required to drill a borehole with a diameter of 246 mm in hard rock with a strength coefficient $f = 13–14$.

Technical data of the impact-cutting bit and the rock are as follows:

- bit rotation speed – 60 rpm;
- impact frequency of the pneumatic hammer – 1,800 blows/min;
- three-sector bit funnel with an angle between sectors – 120°;
- the number of teeth on the bit – 15;
- the number of bit impacts per one bit revolution – 30;
- the radius of the undercut – $R_u = 113$ mm;
- the radius of the axial borehole – $R_a = 20$ mm;
- the angle of the rock sector being sheared – $\alpha = 0.0456$ rad;
- distance from the tooth to the edge of the ledge – $a = 5$ mm;
- width of the annular undercut $b = 93$ mm;
- height of the ledge $h = 3$ mm;
- the limit of permissible tensile stress of the rock – $[\sigma] = 200 \cdot 10^5$ N/m^2;
- the limit of permissible shear stress in the rock – $[\tau] = 400 \cdot 10^5$ N/m^2;
- the modulus of elasticity of this rock – $E = 8 \cdot 10^{10}$ N/m^2.

The energy of impact of a single tooth $A_{im.t}$, J, is

$$A_{im.t.} = \frac{\left[\sigma_p\right]^2 \cdot \left(a^2 + h^2\right) \cdot \left(R_u - R_a\right)}{E} = \frac{200^2 \cdot 10^{10}\left(25+9\right) \cdot 10^{-6}\left(113-20\right) \cdot 10^{-3}}{8 \cdot 10^{10}} = 1{,}581 \cdot 10^{-5}.$$

The energy of the bit impact A_b, J, is

$$A_b = 15 \cdot 1{,}581 \cdot 10^{-5} = 0.237.$$

The energy of the bit impact per one revolution $A_{b.r.}$

$$A_{b.r.} = 30 \cdot 0.237 = 7.11.$$

The energy of the bit impact per one revolution $A_{b.r}$, J, taking into account the efficiency of the pneumatic hammer and compressor is

$$A_r = \frac{7.11}{0.3} = 23.7\ ,$$

where A_r, J, is the energy of the bit impact per one revolution, taking into account the efficiency of the pneumatic hammer and compressor.

The energy required to shear a single rock ledge from the cutter to the nearest vertical crack is

$$A_s = \frac{0.5\left[\tau_{\text{ç}}\right]^2 \alpha^2 \left(R_u{}^2 - R_a{}^2\right) R_u}{E} = \frac{0.5 \cdot 400^2 \cdot 10^{10} \cdot 208 \cdot 10^{-3} \cdot 0.0124 \cdot 0.113}{8 \cdot 10^{10}} = 291 \cdot 10^{-4},$$

where A_s, J, is the energy required to shear a single rock ledge from the cutter to the nearest vertical crack.

The energy required to shear a rock layer per one bit revolution is

$$A_{sl} = 291 \cdot 10^{-4} \cdot 15 = 0.436,$$

where A_{sl}, J, is the layer shearing energy during a single impact

$$A_l = 0.436 \cdot 30 = 13.08,$$

where A_l, J, is the energy required to shear a rock layer per one drill bit revolution.

The energy required to drill one rock layer 3 mm thick per one drill bit revolution is

$$E_{d1} = A_r + A_l = 23.7 + 13.08 = 36.78,$$

where E_{d1}, J, is the energy required to drill one rock layer 3 mm thick per one drill bit revolution.

The energy required to drill one meter of the protruding part of the borehole bottom with a diameter of 246 mm using an impact-cutting bit, E_p, J

$$E_p = (1{,}000/3) \cdot 36.78 = 12{,}265.$$

Given that the corner zone of the borehole is drilled by roller-cone cutters, and the axial pilot borehole is drilled by a chisel-type bit with a pneumatic hammer, i.e., the usual amount of electricity is consumed, the total amount of energy expended to drill 1 m of the borehole using an impact-cutting bit will increase by 5,602 J for a borehole diameter of 246 mm and will amount to

$$E_t = E_p + 5{,}602 = 12{,}265 + 5{,}602 = 17{,}867,$$

where E_t, J, is the total amount of energy expended to drill 1 m of a borehole using an impact-cutting bit.

The energy consumption of a standard roller-cone bit with a diameter of 246 mm for drilling 1 m of hard rock with a strength coefficient $f = 13–14$ is as follows

$$E_{rc} = 30{,}188 - 34{,}716,$$

where E_{rc}, J, is electrical energy consumption of a roller-cone bit with a diameter of 246 mm required to drill 1 m of hard rock with a strength coefficient $f = 13–14$.

Thus, the energy consumption for drilling a borehole with a diameter of 246 mm in rock with a strength coefficient $f = 13–14$ using an impact-cutting bit is approximately 1.7–1.9 times lower than the energy consumption for drilling a borehole of the same diameter in the same rock using a standard roller-cone bit.

As the borehole diameter increases, the difference in drilling energy intensity between a standard roller-cone bit and an impact-cutting bit increases following a near-quadratic relationship, since the area of the borehole bottom surface increases quadratically. The relationships between drilling energy intensity for hard rocks ($f = 13–14$) using roller-cone and impact-cutting bits are shown in Fig. 11.

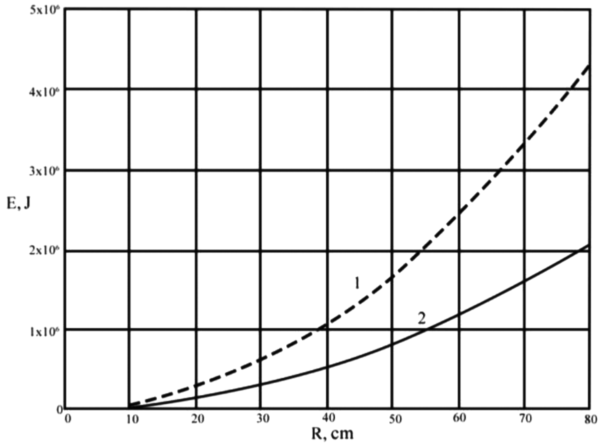

Fig. 11. Graphs showing the dependence of drilling energy consumption in hard rock on borehole diameter: 1 – roller-cone bit; 2 – impact-cutting bit

Conclusions. Thus, the first important advantage of the new technology for drilling ventilation boreholes is the fact that it enables a guaranteed connection between any selected location in underground mine workings, where a significant amount of fresh air is required, and the surface by means of a ventilation borehole of a specified diameter. This makes it possible to save substantial costs on transporting fresh air to the mining faces and to increase coal production. As is well known, coal mining is accompanied by the release of significant amounts of methane, which must be diluted with a sufficient volume of air, i.e., reduced to a concentration of up to 4 %, in order to prevent the possibility of methane-air mixture explosions. If the supply of fresh air is insufficient, the operating speed of the mining shearer is reduced to levels compliant with safety regulations, which in turn leads to a decrease in daily coal production. The application of the new ventilation borehole drilling technology will ensure that the mining area has a sufficient supply of fresh air and can operate the mining shearer at its maximum feasible speed.

It is well known that removing the rock cuttings upward when drilling a borehole downward requires a significant amount of compressed air or water, which in turn demands substantial electrical energy and considerably increases the cost of drilling boreholes. The fact that the bottom surface of the ventilation borehole has the shape of a downward-facing truncated cone, and that the rock cuttings are removed into the underground workings via the pilot borehole, greatly simplifies and accelerates the process of removing rock debris from the borehole. The cuttings slide along the conical bottom surface into the pilot borehole, from which they fall into the mine working. This method of removing rock cuttings during drilling requires significantly less energy and resources, which substantially reduces the cost of drilling ventilation boreholes.

The ventilation borehole drilling technology developed by the authors makes it possible to solve the problem of drilling ventilation boreholes at a significantly lower cost, to save substantial funds on air transportation in the mine workings, and to increase coal production while reducing its producing cost.

The drill bit for large-diameter boreholes, developed by the authors, drills approximately 80 % of the borehole bottom with energy consumption that is twice as low as those of existing drill bits, and also with 3–4 times less wear on the cutting teeth and the teeth of the chisel-type crowns due to significantly reduced loads. These advantages of the drill bit are particularly noticeable when drilling large-diameter boreholes, which can now be completed in a single pass with lower costs. The use of this drill bit design, together with the new technology for drilling ventilation boreholes and large-diameter boreholes for other purposes, will significantly increase drilling speed, reduce energy consumption and drill wear, and, as a result of these advantages, substantially reduce drilling time and the cost of drilling operations.

References.

1. Antonchyk, V. Ye., Minieiev, S. P., Maltseva, V. Ye., & Ukolova, T. M. (2025). *Method for drilling ventilation boreholes* (Patent UA 202403755). Ukrainian National Office of Intellectual Property and Innovation.

2. Antonchyk, V. Ye., Minieiev, S. P., Yanzhula, O.S., & Maltseva, V. Ye. (2024). *Drill bit for large diameter boreholes* (Patent UA 202402677). Ukrainian National Office of Intellectual Property and Innovation.

3. Antonchyk, V. Ye., Minieiev, S. P., Hankevych, H. F., Pashchenko, O. A., Zakharova, D. R., & Lyvak, O. V. (2022). *Impact-cutting drill bit* (Patent UA 202204200). Ukrainian National Office of Intellectual Property and Innovation.

4. Kolesnyk, V. Ye., Pavlychenko, A. V., & Kholodenko, T. F. (2018). Comprehensive assessment of the environmental hazard level of drilling and blasting technologies using emulsion explosives in quarries. *Collection of scientific papers of the National Mining University,* (55), 360-370.

5. Biletskyi, V. S., & Onkovych, H. V. (2024, April). Cinema didactics; video materials on oil and gas transportation in the development of professional media competence of oil and gas engineering specialists. *V International Scientific and Practical Conference 'SCIENCE AND SOCIETY: MODERN TRENDS IN A CHANGING WORLD'*, Vienna, Austria, (pp. 229-241). Retrieved from https://sci-conf.com.ua/wp-content/uploads/2024/04/SCIENCE-AND-SOCIETY.-MODERN-TRENDS-IN-A-CHANGING-WORLD-15-17.04.2024.pdf

6. Zhang, J., Wu, Y., & Kang, H. (2025). Application of large-diameter precise directional drilling borehole formation technology in coal mine construction. *Frontiers in Built Environment, 11*, 1567141. https://doi.org/10.3389/fbuil.2025.1567141

7. Mysliuk, M. A., Rybchych, I. Y., & Yaremiichuk, R. S. (2012). *Borehole drilling: Reference book: Vol. 4: Borehole completion*. Kyiv: Interpres LTD. ISBN 978-966-501-036-4.

8. Amadike, M. P., Nwanesi, F. O., Anochie, U. E., Kalu, A. O., Okoli, E. M., & Okeke, O. C. (2024). Drilling methods and applications in engineering and geology: A review. *International Journal of Engineering and Modern Technology*, *10*(3), 40-65. https://doi.org/10.56201/ijemt.v10.no3.2024.pg40.65

9. Eremin, M. O., Chirkov, A. O., Pazhin, A., Laptev, S. A., & Chanov, D. V. (2024). Finite-difference analysis of influence of borehole diameter and spacing on reduction in rockburst potential. *Mining, 4*(4), 1058-1074. https://doi.org/10.3390/mining4040058

10. Liu, G., & Xu, K. (2023). Drilling: Types and characteristics. In *ECPH Encyclopedia of Mining and Metallurgy*. Springer. https://doi.org/10.1007/978-981-19-0740-1_351-1

11. Wang, G., Deng, F., Ren, K., Fang, Y., & Xu, H. (2025). Finite element analysis of excavation stability of deep and large ventilation shafts using raise boring machine method. *Buildings*, *15*(2), 287. https://doi.org/10.3390/buildings15020287

12. Pinchiaroglio, L., Brino, L., Gallina, D., Gilli, P., Humbert, E., Lione, S., Parisi, M. E., & Turi, A. (2025). Drilling parameter analysis in deep and large diameter shaft excavation: The Avrieux ventilation shafts case. In *Tunnelling into a Sustainable Future – Methods and Technologies*, (pp. 146-160). CRC Press. https://doi.org/10.1201/9781003559047-146

13. Mustafaev, O. B., & Djuraev, R. U. (2021). Improving the efficiency of rock destruction tools when drilling wells in difficult mining and geological conditions. *International Journal of Emerging Trends in*

Engineering Research, 9(3), 321-328. https://doi.org/10.30534/ijeter/2021/08932021

14. Zhukova, N. I., Kriuchkov, A. I., Zaichenko, S. V., & Smoliar, V. H. (2022). Assessment of energy consumption of drilling tools when drilling boreholes in carstified rock blocks. *Scientific journal 'Energy: Economics, Technology, Ecology'*, (3). https://doi.org/10.20535/1813-5420.3.2022.271495

15. Nazarov, A. Ye., Hankevych, V. F., Pashchenko, O. A., & Kiba, V. Ya. (2020). Reducing the energy consumption of borehole drilling with rotary-percussive machines. *Geotechnical Mechanics*, (150), 146-155. https://doi.org/10.15407/geotm2020.150.146

16. Minieiev, S. P., Antonchyk, V. Ye., Hankevych, V. F., Livak, O. V., Kiba, V. Ya., Kuts, O. V., & Zakharova, D. R. (2022). Search for methods to increase the productivity of drilling boreholes in hard rock formations. *Fundamental and applied problems of ferrous metallurgy*, (36), 499-506. https://doi.org/10.52150/2522-9117-2022-36-499-506

17. Rossi, E., Saar, M. O., & Rudolf von Rohr, P. (2020). The influence of thermal treatment on rock–bit interaction: A study of a combined thermo–mechanical drilling concept. *Geothermal Energy, 8*, 16. https://doi.org/10.1186/s40517-020-00171-y

18. CN112302700B (2025). *Ventilation shaft for subway section tunnel and construction method thereof.* Google Patents. Retrieved from https://patents.google.com/patent/CN112302700B/en

19. Liu, Z., Song, Z., Cheng, S., Jing, G., Zhao, J., Chen, Y., & Zhao, L. (2023). Research on technology and equipment system of large diameter shaft drilling based on gravity slagging. *Coal Science and Technology, 51*(1), 272-282. https://doi.org/10.13199/j.cnki.cst.2022-1758

20. Savage, M., Cardoe, J., Kueck, A., Huang, X., & Bomidi, J. (2023). Advancing drill bit design to counter challenges in hard rock applications using full-scale testing in basalt. *GRC Transactions, 47*, 1-12.

21. Ye, H., Yu, H., He, S., Tian, L., Zheng, X., & Bu, C. (2024). Innovation and application of cluster edge buttons of DTH hammer drill bit in large-diameter geothermal well with high-strength rock. *Applied Sciences, 14*(23), 11184. https://doi.org/10.3390/app142311184

22. Fang, Y., Wang, G., Ren, K., Deng, F., & Xu, H. (2025). Finite element analysis of shaft excavation stability using raise boring machine method in karst strata with multiple cavities. *Buildings, 15*(21), 3842. https://doi.org/10.3390/buildings15213842

Технологія та інструмент для буріння вентиляційних свердловин великого діаметру

С. П. Мінєєв[1], *В. Є. Антончик*[*1], *А. В. Пазиніч*[1], *В. Ф. Ганкевич*[1], *І. М. Мацюк*[2]

1 – Інститут геотехнічної механіки імені М. С. Полякова НАН України, м. Дніпро, Україна

2 – Національний технічний університет «Дніпровська політехніка», м. Дніпро, Україна

[*] Автор-кореспондент e-mail: volodimirantonchik1958@gmail.com

Мета. Розробити енергоефективну технологію буріння вентиляційних свердловин великого діаметра з підземних виробок на поверхню та створити буровий інструмент, що зменшує витрати енергії й знос під час руйнування міцних гірських порід.

Методика. Розробка нової технології буріння вентиляційних свердловин і бурового інструменту для буріння свердловин великого діаметру здійснювалась на основі методики ТРВЗ (теорія рішення винахідницьких задач) та АРВЗ (алгоритму рішення винахідницьких задач). Формування теоретичних рішень виконувалося шляхом фізичного й математичного моделювання напруженого стану порід під дією різних типів бурового інструмента, а результати розрахунків опрацьовувалися в середовищі Mathcad.

Результати. Технологія буріння передбачає буріння початкової висхідної свердловини малого діаметра з виробки, що слугує напрямною. Далі бурять одну або дві свердловини великого діаметра. Їхній вибій формується у вигляді усіченого конуса, що забезпечує самопливне переміщення продуктів руйнування до випереджальної свердловини й подальше їх надходження до виробки. Технологія включає створення двох типів випереджальних врубів: центрального й кільцевого в кутковій зоні. Така конфігурація вибою формує сприятливі умови для подальшого руйнування породи. Ударним інструментом на поверхні забою створюють сітку тріщин у зоні між врубами, після чого тріщинувата порода ефективно видаляється ріжучими елементами інструмента. Створена конструкція бурового долота містить шарошкові долота для утворення кільцевого врубу й долотчату коронку для формування центрального. Для руйнування породи у проміжній зоні застосовується пневмоударник із долотчатою коронкою, що формує тріщинування, і ріжуча коронка для зняття ослабленого шару.

Наукова новизна. Технологія ґрунтується на технічних рішеннях, що визначають ефективні принципи буріння у складних геологічних умовах і підвищують стійкість інструменту в міцних породах. Конструкція долота поєднує ударно-ріжучий механізм руйнування й раціональний розподіл енергії у процесі буріння.

Практична значимість. Запропонована технологія й буровий інструмент дають змогу суттєво скоротити тривалість бурових робіт та їхню вартість. Підвищення швидкості проходки, зменшення енергоємності та зносу інструмента забезпечують економічну ефективність. Технологія дозволяє оперативно бурити вентиляційні свердловини у необхідних точках, покращувати вентиляцію шахтних виробок і зменшувати витрати на транспортування повітря.

Ключові слова: *гірські породи, вентиляційні свердловини, бурове долото, шахтні виробки, буріння, бурові штанги*

The manuscript was submitted 03.09.25.